Bylaw No. 2012-11 – The Zoning Bylaw
Town of Shaunavon
Application for a Development Permit

Application No: _____

1. Applicant:

a) Name: _____

b) Address: _____ **Postal Code:** _____

c) Telephone Number: _____ **Cell phone:** _____

2. Registered Owner: as above ( ), or:

a) Name: _____

b) Address: _____ **Postal Code:** _____

c) Telephone Number: _____ **Cell phone:** _____

3. Property: Legal Description: Lot _____ **Block** _____ **Plan No.** _____
Certificate of Title No: _____ **Date:** _____

4. Parcel Size: Dimensions: _____ **Area:** _____ **(m^2)**

5. Existing Land Use: _____
_____

6. Proposed Land Use / description of Proposed Development:
_____
_____

7. Proposed date of Commencement: _____
Proposed date of Completion: _____

8. Other Information:
_____
_____

9. FOR NEW CONSTRUCTION PROVIDE A DETAILED SITE PLAN, drawn to scale on a separate sheet showing, with labels, the following existing and proposed information:

- a scale and north arrow,
- a legal description of the site,
- mailing address of owner or owner's representative,
- site lines,
- Bylaw site line setbacks,
- front, rear, and side yard requirements,

- site topography and special site conditions (which may require a contour map), including ponds, streams, other drainage runs, culverts, ditches, and any other drainage features,
- the location of any buildings, structures, easements, and dimensioned to the site lines,
- the location and size of trees and other vegetation, especially natural vegetation, street trees, and mature growth,
- proposed on-site and off-site services,
- landscaping and other physical site features,
- a dimensioned layout of parking areas, entrances, and exits,
- abutting roads and streets, including service roads and alleys,
- an outline, to scale, of adjacent buildings on adjoining sites,
- the use of adjacent buildings and any windows overlooking the new proposal,
- fencing or other suitable screening,
- garbage and outdoor storage areas,
- other, as required by the Development Officer or Council to effectively administer this Bylaw.

10. a) Manufactured Homes: C.S.A.Z240 Approval (serial) Number: _____
Manufactured Home date of Manufacture:_____

b) Modular Homes: C.S.A A277 Approval (serial) Number: _____
Modular Home date of Manufacture: _____

11. Declaration of Applicant:

I, _____of the Town / City of _____in the Province of Saskatchewan, do Solemnly declare that the above statements contained within the application are true, and I make this solemn declaration conscientiously believing it to be true, and knowing that it is of the same force and effect as if made under oath, and by virtue of "The Canada Evidence Act."

I agree to indemnify and hold harmless the Town of Shaunavon from and against any claims, demands, liabilities, costs and damages elated to the development undertaken pursuant to this application.

Date: _____ Signature: _____

FOR MUNICIPAL OFFICE USE ONLY:

1. Present Zoning: _____

2. Proposed Use(s): Principal: _____ Accessory: _____

3. Proposed Yards: Front _____ Rear _____Side _____ Side _____
Required Yards: Front _____ Rear _____Side _____Side _____

4. Application Status: Meets Bylaw Requirements: ____ Does Not Meet Bylaw Requirements: _____
Other Regulations/Comments:

Date: _____ Development Officer: _____

NOTICE OF DECISION FOR A DEVELOPMENT PERMIT

Town of Shaunavon
Notice of Decision for a Development Permit or Zoning Bylaw Amendment

Application No: _____

To: _____ _____
(Applicant) (Address)

This is to advise you that your application for a:

☐ **Permitted Use or Form of Development, or**
☐ **Discretionary Use or Form of Development, or**
☐ **Request for a Zoning Bylaw Amendment**

Has Been:

☐ **Approved.**
☐ **Approved subject to conditions or Development Standards, as listed in the attached schedule**
☐ **Refused for the following reason:**

_____
_____
_____

If your application has been approved with or without conditions, this form is considered to be the Development Permit granted pursuant to the Zoning Bylaw.

Right of Appeal

Please be advised that under *The Planning and Development Act, 2007*:

An applicant may appeal to the development appeals board if they allege:

- A development permit has been wrongfully refused.
- The municipality's zoning bylaw was misapplied (e.g. in the issuance of a development permit).
- An enforcement order under *The Planning and Development Act, 2007* has been issued.
- Variance to standards in the municipality's zoning bylaw can be justified by special circumstances.
- Development standards and/or conditions prescribed in a development permit or associated with site plan control are excessive.
- A minor variance application has been approved, refused or revoked.
- Council has failed to make a decision within the prescribed time period or has imposed terms and conditions on a development permit under an interim development control bylaw, in a direct control district, or in an architectural control district.
- Council has failed to amend its zoning bylaw to remove a holding symbol, or has failed to make a decision on removing a holding symbol within the prescribed time period.

There is no ability to appeal when:

- Council refuses a development permit application because the proposed use or the intensity of use is not permitted in the municipality's zoning bylaw or the proposed use is prohibited in the municipality's zoning bylaw.
- Council refuses a discretionary use application.
- Council refuses to rezone a person's land

Your Appeal must be submitted in writing, along with a $50 fee, within 30 days of the date of this notice to:

Secretary, Development Appeals Board

Town of Shaunavon
Box 820
Shaunavon, Saskatchewan
S0N 2M0

Date: _____ **Development Officer:** _____

Note:
This Permit expires 12 months from the date of issue. A Building Permit is also required for construction of a building.

Town of Shaunavon
Building Permit Application
under *The Construction Codes Act*

Applicant Information (permit applicant can be an agent of the owner)

Company	company name if applicable	
Primary Contact	primary contact for project	
Mailing Address	for correspondence purposes	
Phone and Email	primary contact:	primary contact

Permit Information

Project Location	civic address or legal description	
Project Description	written description of project	
Project type (check one)	☐New Construction ☐Addition, Alteration, Repair or Renovation to Existing Building ☐Temporary Structure ☐Relocation of an Existing Building ☐Demolition of an Existing Building ☐Other_____	
Attached	Code analysis: ☐Yes ☐No Construction Plans and Specifications: ☐Yes ☐No Valid and In force Town of Shaunavon Development Permit: ☐Yes ☐No or ☐Not required as per the Town of Shaunavon's Zoning Bylaw and amendments thereto.	
Building Area and Height	area in square meters	height in storeys

Building area means the greatest horizontal area of a building above grade within the outside surface of exterior walls or within the outside surface of exterior walls and the centre line of firewalls.

Building height (in storeys) means the number of storeys contained between the roof and the floor of the first storey.

Value of Construction	$

Value of construction is defined as the total costs to the owner for the building construction in its completed form and includes the cost of all building work, materials of construction, building systems, labour and overhead and profit of the contractor and subcontractors.

Owner Information (include all owners listed on the property title or attach in a separate sheet)

Owner		
Project Contact		
Address		
Phone and Email		

General Contactor Information (a building owner can be identified as a self-contractor)

Company		
Project Contact		
Address		
Phone and Email		

Lead Designer (this is the individual responsible for the overall design, all other designers should be included on a separate sheet attached to this application)

Company		
Project Contact		
Address		
Phone and Email		

Declaration by Applicant

I hereby declare that the above statements contained within this application and attached drawings are true and correct. I agree that where required, a Development Permit must be issued in order for the Building Permit to be valid. Neither document relieves the owner, the applicant, or the owner's agent from complying with all municipal bylaws and/or Provincial and Federal acts and regulations including the National Building Code of Canada (NBC) and the National Energy Code of Canada for Buildings (NECB) and the National Plumbing Code of Canada (NPC), and that it is my responsibility to ensure compliance with such legislation, regulations, bylaws and codes regardless of any plan review or inspections that may or may not be carried out by the building official, local authority or its authorized representatives. I agree that no construction shall commence without proper permits and approvals.

Name	
Signature	
Date	

Building Permit No. _____

Permission is hereby granted:

This permit is issued under the following conditions: This permit is issued with compliance to the provisions listed in the attached "Plan Examination Report." It is the owner's responsibility to ensure all relevant items mentioned in the Plan Examination Report are provided for the sub-trades.

Building or Municipal Official	
Approval Signature	
Date of issue:	

This form is considered to be the Building Permit granted pursuant to the Town of Shaunavon's Building Bylaw and shall expire 12 months from the Date of Issue.

DECK WORKSHEET

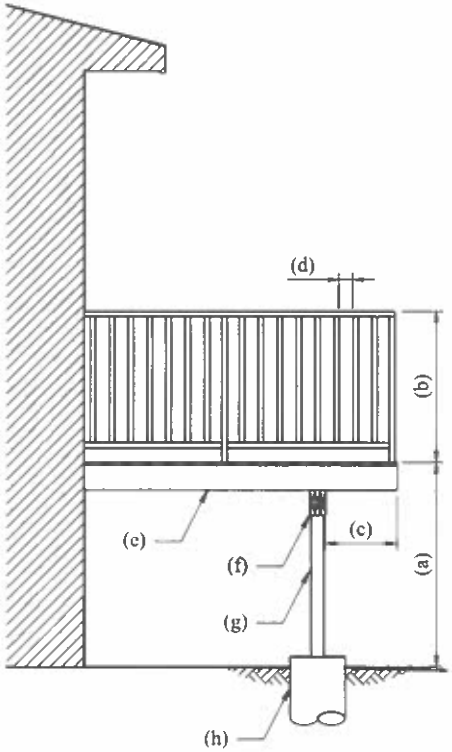

DECK

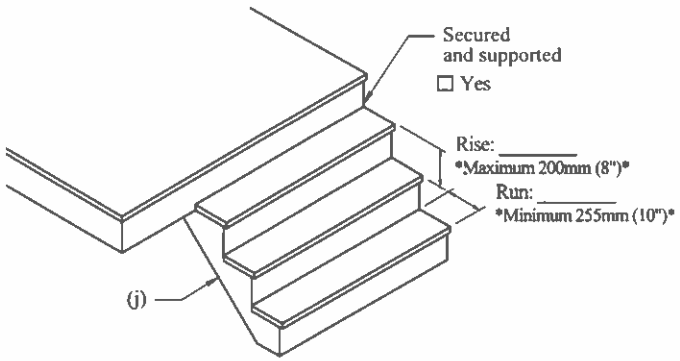

NOTE: Handrail required when more than 3 risers.

STAIR

Please complete the following:

DECK DESIGN:

(a) Deck Height: _____
Guardrail required when deck height is > 600mm (24") above finished grade

(b) Guardrail Height: _____

(c) Cantilever: _____
Maximum 600mm (24")

(d) Maximum 100mm (4") spacing

DECK CONSTRUCTION:

Guardrail Construction (check all that apply)

☐ Glass ☐ Vertical Spindles
☐ Wood ☐ Horizontal Spindles *permitted when deck is <4.2m (13'-9")*
☐ Metal

(e) Joist Size: 2x___
Material: _____

(f) Beam Size: ☐ 2 ☐ 3 ☐ 4 - 2x___
Material: _____

(g) Column Size: ☐ 4x4 ☐ 6x6
Material: _____
Number of Columns: _____

(h) Foundation:
☐ Deck Blocks
☐ Piles: Diameter_____ x Depth_____

(j) Stringer Size: 2x___
Material: _____
Number of Stringers: _____

Property Line

SITE PLAN:

Sketch house footprint and deck location and indicate the following:

☐ Overall dimensions of deck
☐ Distance to property lines
☐ Location of beams
☐ Location of columns

JOIST SPANS		
Joist Size	16" o.c.	24" o.c.
2 x 6	9'-0"	8'-2"
2 x 8	11'-2"	10'-7"
2 x 10	13'-5"	12'-9"

2 PLY BEAMS			
Joist Length	2 x 6	2 x 8	2 x 10
8'-0"	6'-7"	8'-5"	10'-3"
10'-0"	6'-1"	7'-6"	9'-2"
12'-0"	5'-8"	6'-10"	8'-4"

3 PLY BEAMS		
Joist Length	2 x 8	2 x 10
8'-0"	9'-10"	12'-7"
10'-0"	9'-2"	11'-3"
12'-0"	8'-5"	10'-3"

Owner's Name: _____
Address: _____
Municipality: _____

Provided by:

MUNICODE SERVICES LTD